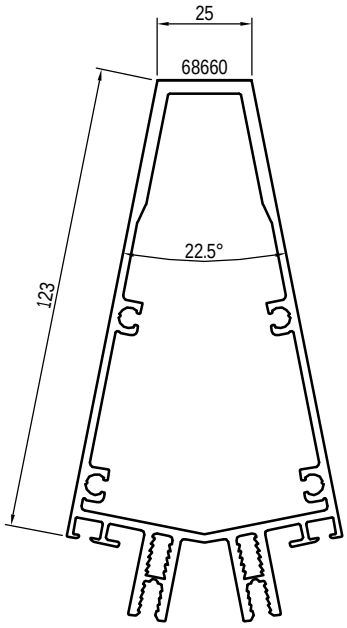

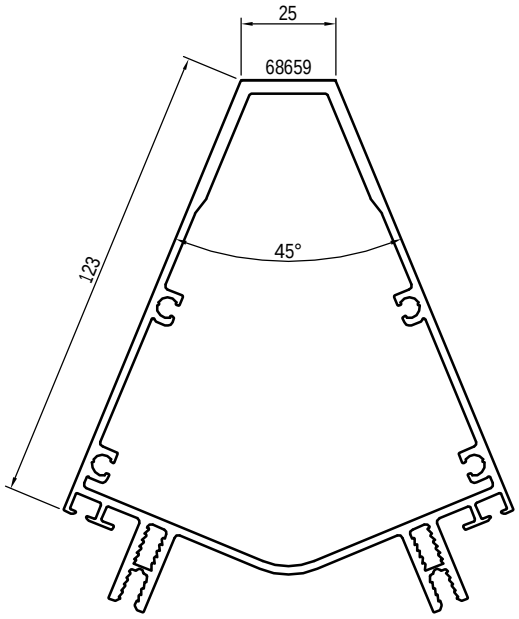

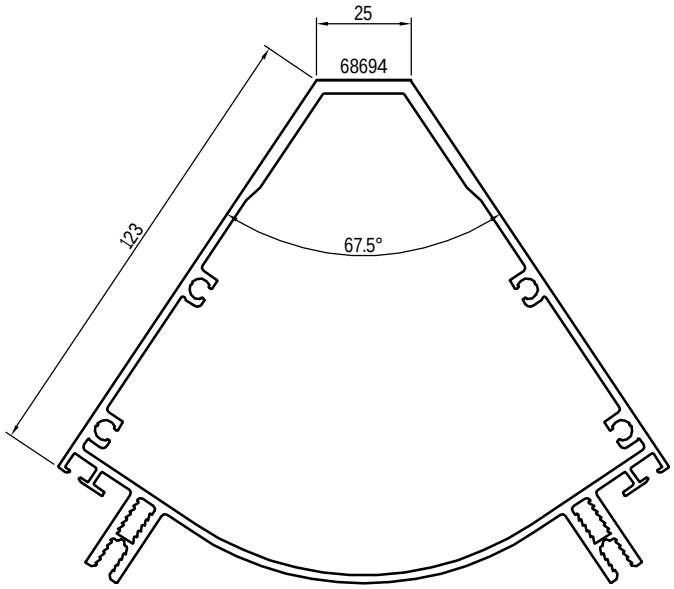

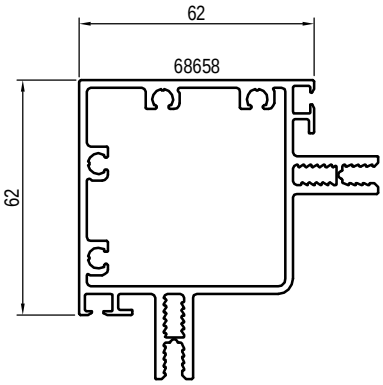

sapa:
buildingsystem

A4150-3003 091102 1:2